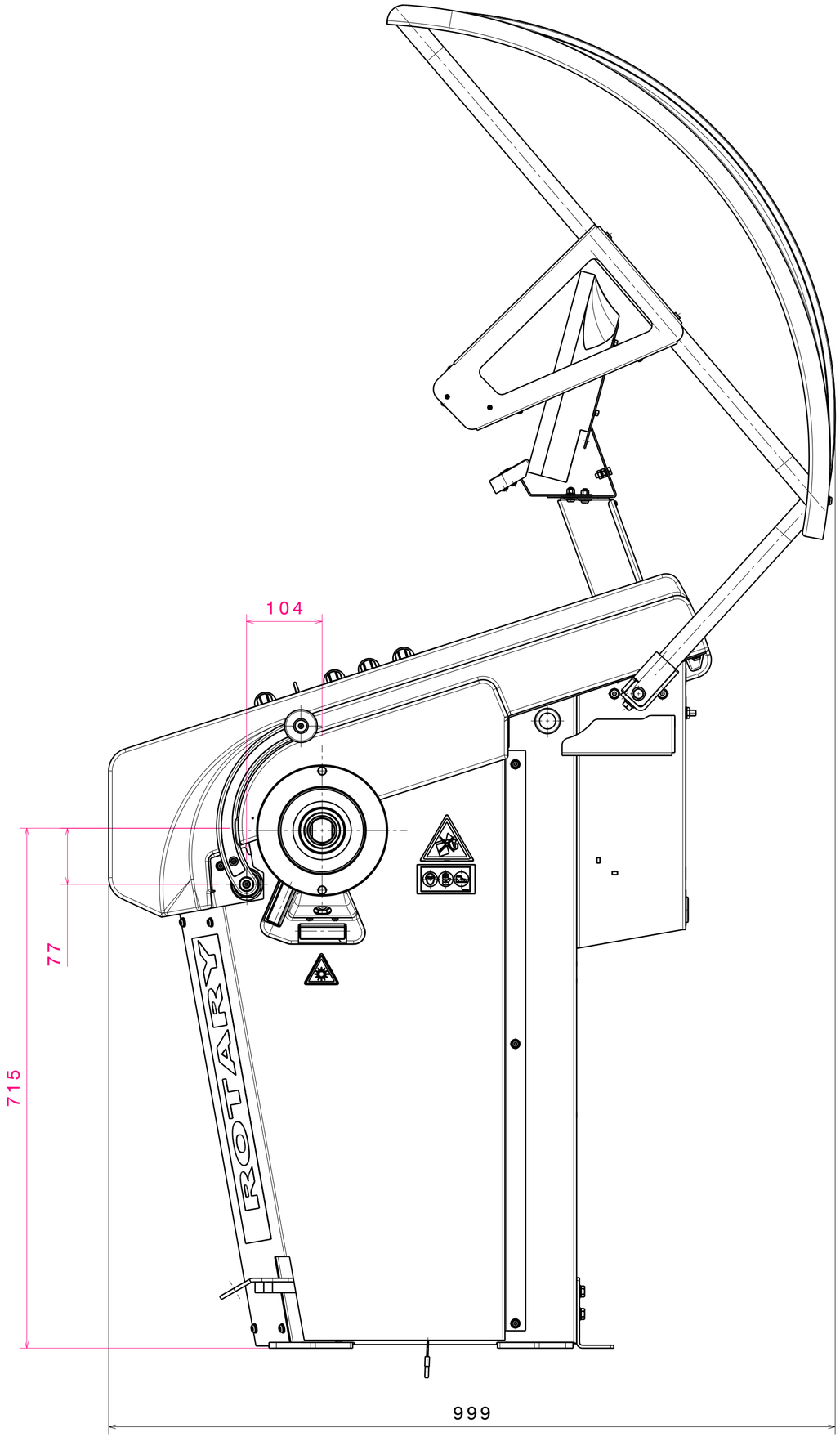
104
77
715
ROTARY
999

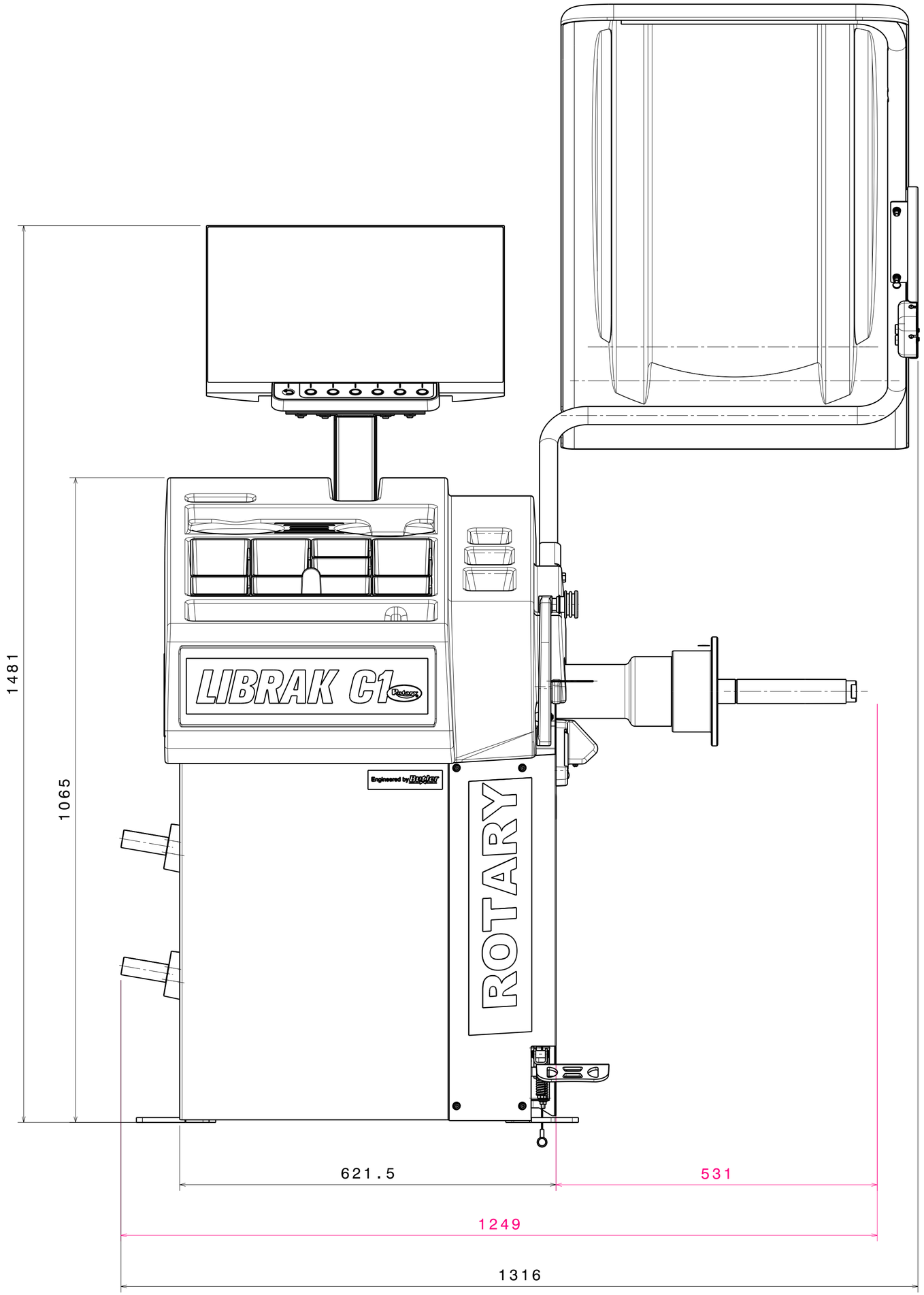
1481
1065
LIBRAK C1
Engineered by
ROTARY
621.5
531
1249
1316