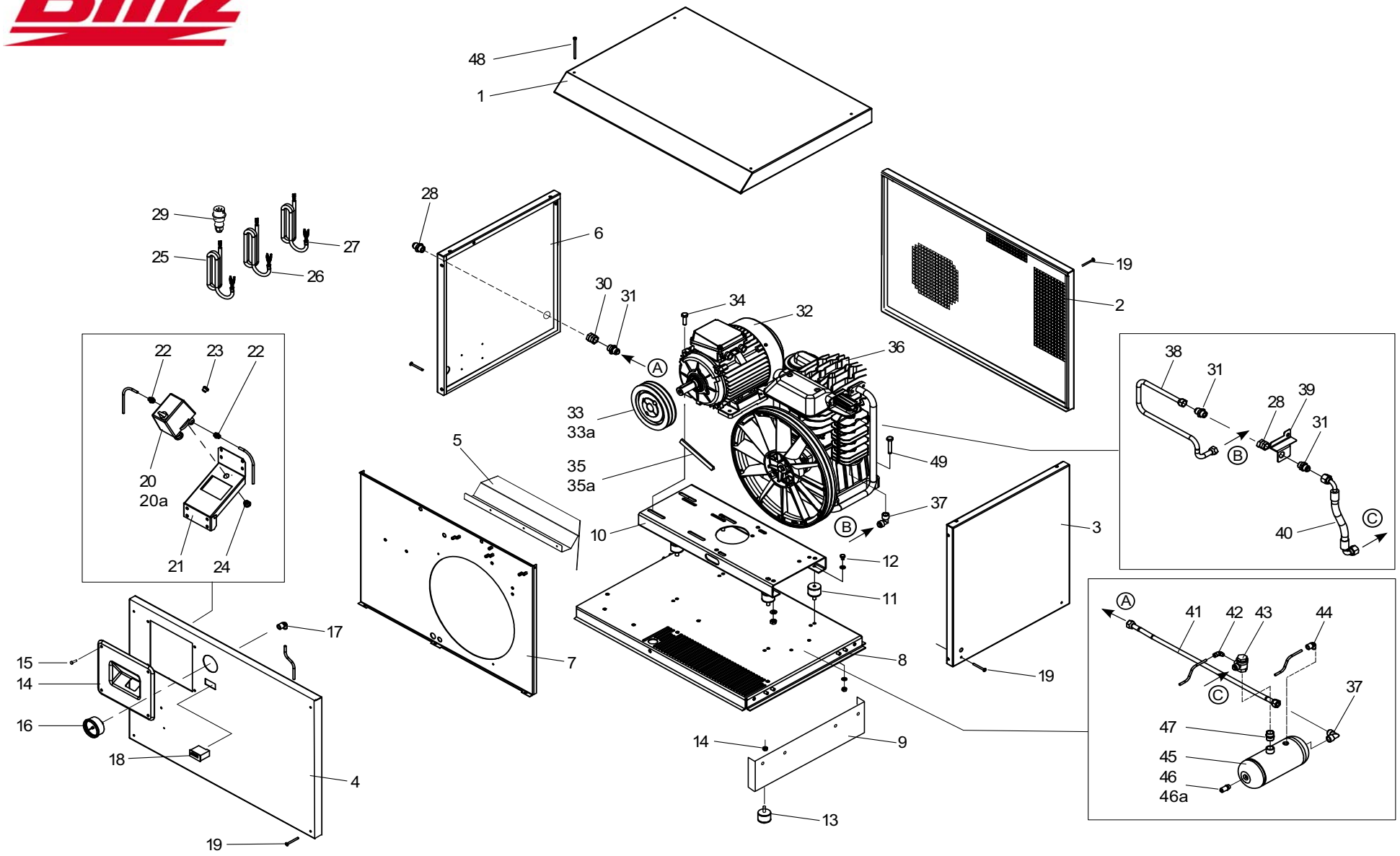

Logos 650/270 H-Box
Works 530/270H-Box

Logos 650/270 H-Box
Works 530/270H-Box

REF. *RIF.*	CODE *CODICE*	QT	DESCRIPTION *DESCRIZIONE*	
1	x	1	Panel	
2	x	1	Panel	
3	x	1	Panel	
4	x	1	Panel	
5	5162860008	1	Air conveyor	
6	x	1	Panel	
7	5167350008	1	Inside panel	
8	5167360008	1	Base	
9	5167430008	2	Lower suport	
10	5167370008	1	Motor Base	
11	7364420000	4	Shock absorber	*Ø40X30 M*
12	7011360000	4	Screw	
13	7360400000	4	Rubber	*Ø70 - 60SH*
14	7020070000	4	Nut	*M8 UNI-5587*
14	7155631000	1	Instruments support	
15	7014420000	6	Screw	*M5X20 UNI-7380*
16	7111030000	1	Pressure gauge	
17	7080890000	1	Joint	*"L" F1/4"-6 RAPIDO*
18	7566190000	1	Hour meter	
19	7014450000	12	Screw	*M5X50 UNI-7380*
20	7251211000	1	Pressure switch	*Logos 650/270 H-Box*
20a	7251231000	1	Pressure switch	*Works 530/270H-Box*
21	7511530000	1	Support	
22	7084220000	2	Joint	*DIR.M1/4"-6 RAPIDO*
23	7090080000	1	Plug	*M3/8"*
24	7016070000	1	Plug	*M1/4 TCEI*
25	7328700000	1	Infeed cable	
26	7328690000	1	Pressure switch Motor cable	
27	7326650000	1	Hour meter cable	
28	7085700000	2	Joint	*1/2"-1/2"FF*
29	7329790000	1	Electric plug (3 poles)	
31	7081311150	3	Joint	*1/2"X1/2"*
32	7380850000	1	Motor	
33	7406600000	1	Pulley	*Logos 650/270 H-Box*
33a	7408550000	1	Pulley	*Works 530/270H-Box*
34	7011170000	4	Screw	*M10X35 UNI-5739*
35	7371590000	1	Belt	*Logos 650/270 H-Box*
35a	7371320000	1	Belt	*Works 530/270H-Box*
36	3021130000	1	Pump unit	*#N/D*
37	7080160000	1	Joint	*"L" 1/2*
38	7231850000	1	Infeed hose	
39	7517970000	1	Hose Support	
40	7236710000	1	Infeed Rubber hose	
41	7234530000	1	Infeed hose	
42	7080780000	1	Joint	*"L" M1/8"-6 RAPIDO*
43	7190150000	1	Non return valve	*FM 1/2"*
44	7080890000	1	Joint	*"L" F1/4"-6 RAPIDO*
45	5156280008	1	Tank 2 lt	*2 Lt*
46	7192010000	1	Safety valve 1/4	*CSC 678/300 10 bar*
46a	7192340000	1	Safety valve 1/4	*CSC 678/300 15 bar*
47	7081311150	1	Joint	*1/2"X1/2"*
48	7012240000	10	Screw	*M5X15 UNI-8112*
49	7011120000	4	Screw	*M10X45 UNI-5739*

VALID FROM 12/2014 - REV.00

REF. *RIF.*	CODE *CODICE*	QT	DESCRIPTION *DESCRIZIONE*
50	7234470000		Rilsan hose complete kit
51	7156270000		Panels kit

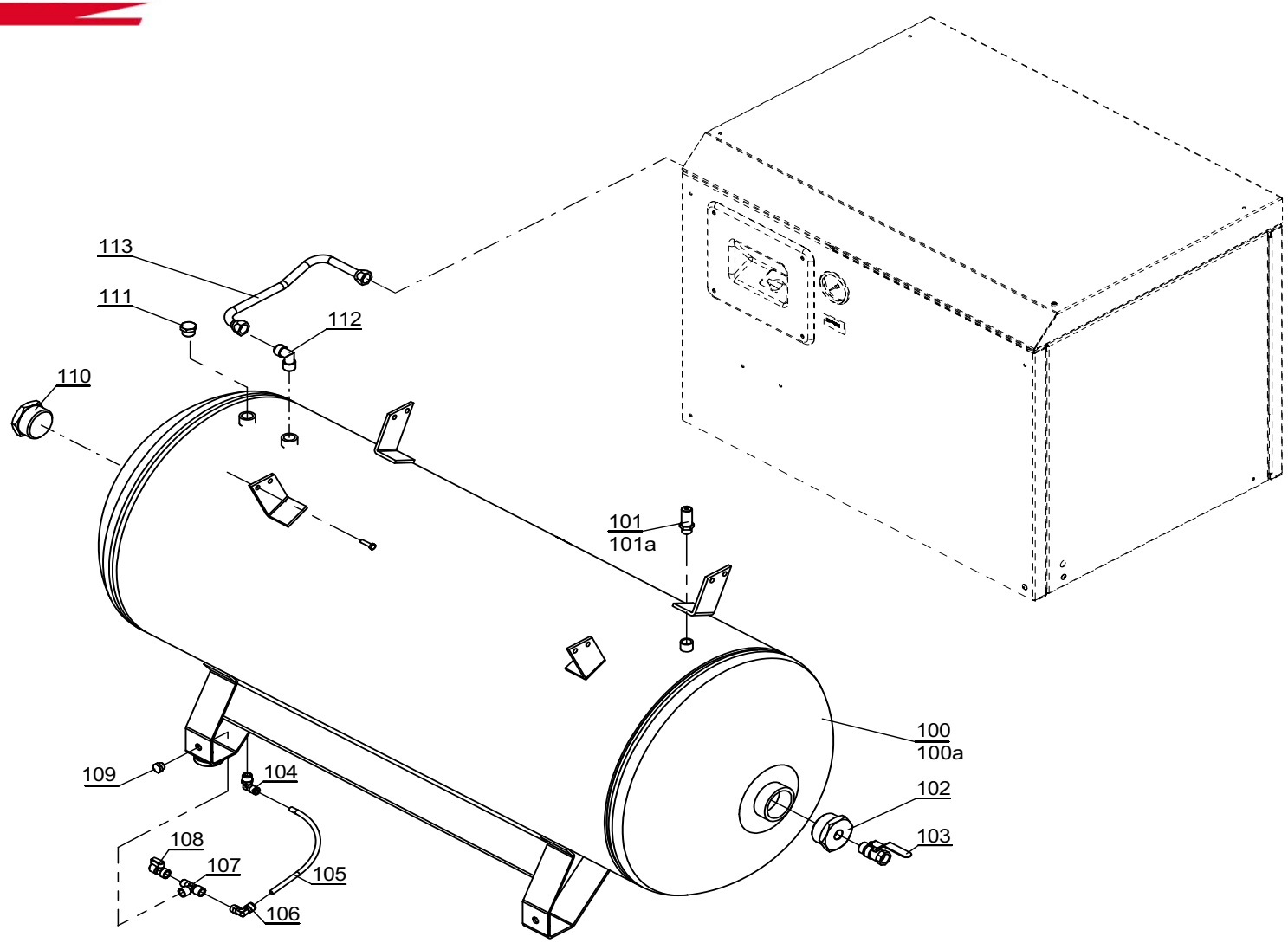

Logos 650/270 H-Box
Works 530/270H-Box

Logos 650/270 H-Box
Works 530/270H-Box

REF. *RIF.*	CODE *CODICE*	QT	DESCRIPTION *DESCRIZIONE*	
100	7477770000	1	Tank 300 lt	*Logos 650/270 H-Box*
100a	7477870000	1	Tank 300 lt	*Works 530/270H-Box*
101	7192090000	1	Safety valve 3/8	*Logos 650/270 H-Box*
101a	7192520000	1	Safety valve 3/8	*Works 530/270H-Box*
102	7085120000	1	Joint	*2"-1/2"MF*
103	7130150000	1	Tap	*MF 1/2"*
104	7082820000	1	Joint	*"L" M3/8"-8*
105	7230080000	1	Rilsan hose	*Ø8X6*
106	7080970000	1	Joint	*"L" M1/4"-8*
107	7082050000	1	Joint "T"	*"T" 1/4 FFM*
108	7130170000	1	Tap	*MF 1/4"*
109	7090090000	1	Plug	*M1/4"*
110	7090050000	1	Plug 2"	*M2"*
111	7090050000	1	Plug	*M2"*
112	7080160000	2	Joint	*"L" 1/2*
113	7239220000	1	Hose	

VALID FROM 12/2014 - REV.00

REF. *RIF.*	CODE *CODICE*	QT	DESCRIPTION *DESCRIZIONE*